Results of an 11-Inch Liquid-Oxygen Hybrid Rocket Motor Combustion Instability Study

Charles Martin/EP12
205–544–7098

Several test programs have been undertaken at MSFC to study the factors (independent variables) contributing to hybrid motor chamber pressure oscillations. Results from these programs reveal that the hybrid motor is a complex system which can best be understood through logical systematic testing. The test series of eight motors described in this overview uses a design of experiments approach that allows for identification of factors and their interactions. For this study, an interaction exists if—and only if—the effect of one factor depends on the level of another factor. Factors under investigation included liquid-oxygen (lox) flow rate/nozzle throat diameter (flowdt), injector pattern (injpat), and the pressure drop across the injector (deltap). The liquid-oxygen flow rate and throat diameter were perfectly correlated (aliased) in an attempt to maintain a constant chamber pressure. Each factor was set at two levels, resulting in a full factorial matrix with eight tests. All other factors in the test series were to remain constant. The test matrix is illustrated in table 3.

TABLE 3.—*Test matrix.*

		Deltap*= 50 psi	Deltap*= 200 psi
injpat = axial	flowdt**= 2 lb/sec and 1.05 in	Test #4 (2/A/50)	Test #2 (2/A/200)
injpat = axial	flowdt**= 5 lb/sec and 1.71 in	Test #8 (5/A/50)	Test #1 (5/A/200)
injpat = soild cone	flowdt**= 2 lb/sec and 1.05 in	Test #5 (2/A/50)	Test #3 (2/A/200)
injpat = soild cone	flowdt**= 5 lb/sec and 1.71 in	Test #7 (5/A/50)	Test #6 (2/A/200)

* Injectors are of the impingement type and were designed to produce the same droplet size in all tests.

** A cavitating venturi was used to regulate flow rate and isolate the feed system from the motor chamber oscillations.

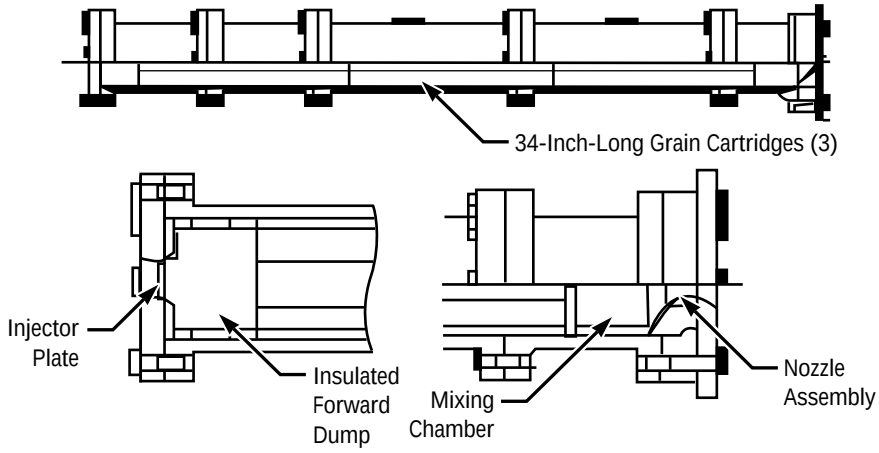

FIGURE 52.—Test article configuration (used with permission from Thiokol Corporation).

Figure 52 is a schematic of the test article. The levels for all three factors could be accomplished by changes made in the injector, nozzle, and feed system. No intentional changes (other than the planned factor levels) were made, either to the test article or to the feed system, during the tests.

Following the test series, a statistical analysis was performed on several response (dependent) variables. For each of the response variables, an analysis of variance was performed to determine which factors and factor interactions had significant influence on the behaviors of the response variables. The analysis used a 0.05 level to test for significance. Table 4 defines the response variables.

Flowdt was the primary effect on fuel, fwdbd, aftbd, O/F, tempint, igntim, throat erosion, and frequencies. The flowdt*injpat and the flowdt*deltap interactions have a second-order effect on fwdbd. Several other factors and interactions had third-order effects on some of the response variables. No effects were identified for oscillation amplitude or C*. The proper variables or variable ranges may not have been adequately tested, and some of the results may have been obscured by the small sample size and/or the inability to select the desired independent variable settings.

Several variables had intriguing correlations with each other. These correlations were not within the context of a formal design and, therefore, should not be taken as indications of associations; however, the correlations may be useful in making decisions about the choice of independent variables for future experimental designs. Response variables C* and amplitude had a correlation coefficient of 0.70. The correlation coefficients between amplitude and the chronological order of testing and amplitude and deltap were –0.78 and 0.49, respectively. The correlation coefficient between C* and deltap was 0.63.

Among the four high-flow-rate motors, the motor showing exceptionally high amplitude oscillations also had very low fuel regression at the forward end. While it would have been advantageous to have more data in the axial direction, funding allowed only six axial stations to be measured.

TABLE 4.—*Definitions of response variables.*

Response Variable	Definition
Fuel	Total amount of fuel consumed during each test.
Fwdbd	Fuel regression distance in the forward 3 inches of the forward grain.
Aftbd	Fuel regression distance in the aft 3 inches of the aft grain.
O/F	Total oxygen flow divided by the total fuel consumed.
C*	The product of the pressure integral, average throat area, and the gravity constant divided by the total mass flow. (Not calculated for P2030007 since it dropped out shortly after 10.1 seconds.)
Tempint	Integral term of the aft chamber temperature* from time = 0.0 to time = 10.1 seconds.
Igntim	Time from 0.0 to first peak on the forward chamber pressure.
Throat Erosion	Average throat erosion.
Frequencies	Frequency from Fast Fourier Transforms (FFT) at same time amplitude was chosen.
Amplitude and Roughness	Amplitude — Peak-to-peak amplitude of largest forward chamber pressure oscillations between 8 and 14.2 seconds where a well-organized single frequency could be found using FFT. Roughness — The total vectical length of the forward chamber pressure to 10.1 seconds. (P2030007 dropped out shortly after this time). Amplitude and roughness are attempts at quantifying the magnitude of pressure oscillations. The correlation coefficient between these two is 0.975. This level of agreement suggests that both are good indications of pressure oscillation magnitude.

* The head-end thermocouple does not survive the testing environment.

A logical extension of this work would involve a series of designed experiments to be conducted to investigate droplet size, droplet velocity, droplet direction, characteristic length (L*), chamber pressure, splashblock design (step height), and/or heat addition to the front end of the motor. Once frequencies and amplitudes are understood, burn rates should be investigated.