The Use of Virtual Reality in the Design Analysis of a Space Station Control Room

Joseph P. Hale II/EO23
205–544–2193

MSFC's Crew/Systems Engineering Branch became involved with the spatial layout of Space Station *Freedom* at the 30-percent design review of the building addition that would have housed, among other things, the payload control area. At that time, the primary interests of the architectural engineers included issues such as adequacy of room size (floor space) and their relative dimensions (aspect ratio), as well as ceiling heights and the relative floor heights of the payload control area and its public viewing area. In order to properly support the design review, it was determined that it would be necessary to develop and assess several feasible spatial layouts of operator consoles and support equipment within the proposed payload control area room. Virtual reality was among the analytical tools used to assess the various layouts.

In the Space Station *Freedom* Program, payload operations and integration functions were to be handled out of MSFC, with one of the payload operations and integration functions being real-time payload operations management and control. Although this is a somewhat distributed function, both inside and outside the Payload Operations Integration Center, the payload control area was to serve as the "front room" control room for this function. The Payload Operations Integration Center has four functional discipline teams: the operations integration team, the data management team, the operations control team, and the mission planning team.

Various design analysis tools were used during the design review: scaled drawings, two-dimensional computer-aided design drawings, and immersive virtual reality. The drawings were used to support such analyses as video wall maintenance access, translation path clearances, adjacency, information flow and access comparisons, and video wall viewing analyses.

Immersive virtual reality was used as, among other things, a human factors design analysis tool for the work areas and other architectural spaces. The use of virtual reality in the macroergonomic analyses of work area topological design enables the consideration of the fields of view from a variety of eye reference points and can include operationally driven components, such as translation paths among the various worksites.[1] Examples of "spaces" include control rooms, space stations, and orbiting telescopes.[2] A validation study for "control room class" ergonomic applications—to help characterize possible distortions or filtering of relevant perceptions in a virtual world—was recently completed at MSFC.[3, 4] The primary objective of the experiment was to begin the process of validating and calibrating the use of virtual reality as a human factors analytical tool.

Although the focus of the 30-percent design review was not spatial layout per se, feasible layouts had to be developed in order to assess the adequacy of particular features of the proposed design. The requirements definition and analyses provided both direction for the design effort and criteria for design analyses. Consoles were first defined and then used as building blocks to develop various configuration options. In reality, this is an iterative process, where console layout affects payload control area layout options, which, in turn, affect console layout options. (Locations for printers, fax machines, document stowage, etc., must also be factored into the payload control area layout.) Several configurations of the console floor plan layout, including large video screens and a public viewing area, were developed using scaled drawings and two-dimensional computer-aided design drawings (fig. 113). These were then modeled in virtual reality. Engineers, management, and the Public Affairs Office utilized the system to visualize the various configurations immersively. Based, in part, on the findings of the virtual reality control room validation study referenced above (regarding subjective and objective assessment accuracy/sensitivity of "virtual" control rooms versus "real" control rooms), researchers determined that the level and type of comparative assessments employed in these analyses fall within the comfort zone of supportable, hence legitimate, judgments.

Engineers and management were able to focus on the operationally driven design features, such as the team-based grouping and layout of the consoles. The virtual reality environment provided a unique method of visualizing the control room "space" not otherwise possible.

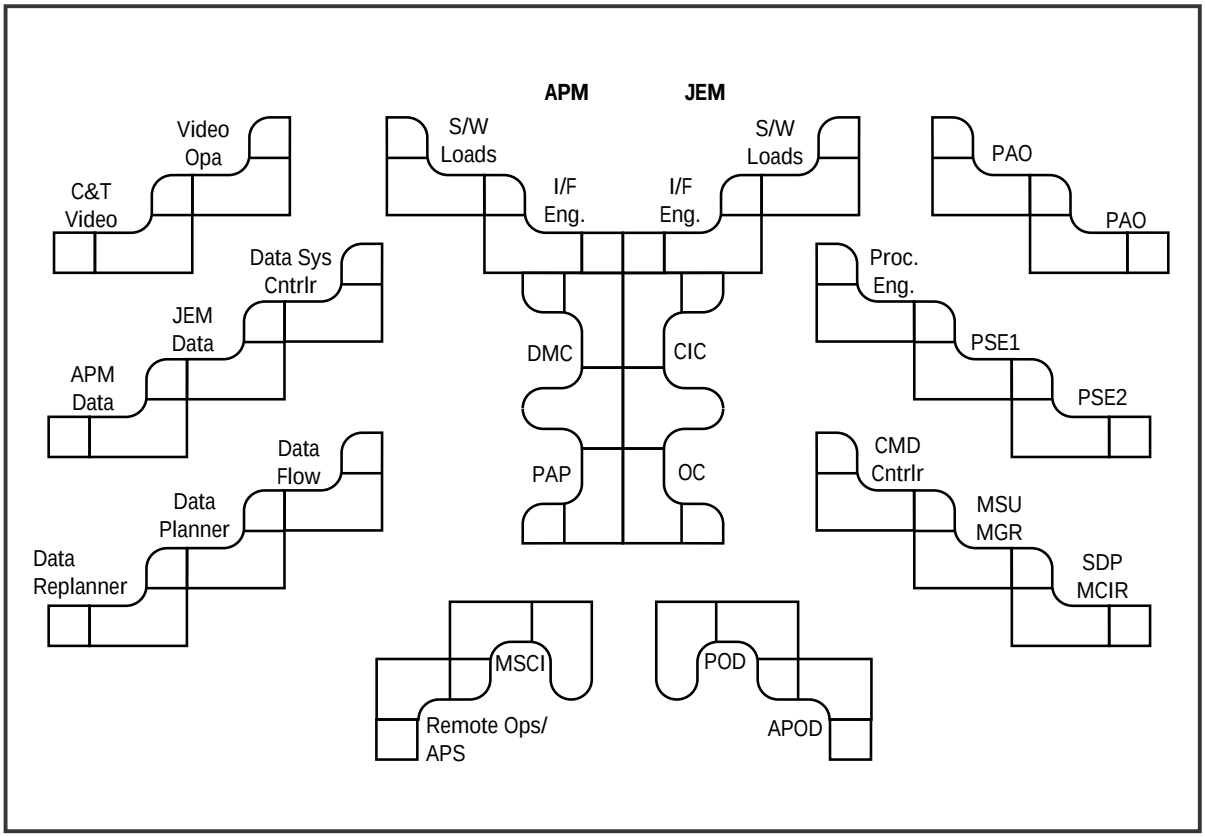

FIGURE 113.—Computer-aided design landscape configuration of the operationally driven payload control area.

Scale and architectural features and relationships that are not—at least immediately—perceptible in plan drawings were much more obvious in the virtual environment, providing better comparative insights and impressions among the various configurations.

Of particular note were the viewing analyses. One issue to be addressed for the 30-percent design review was the relative floor heights of the payload control area and its public viewing area, i.e., how much higher should the floor in the viewing area be above the floor in the payload control area to give the people in the viewing area the best view of control area activities. Part of each of the virtual reality environments was the ability to raise and lower the viewing area floor during a virtual reality session. Simultaneously, the virtual eye height of the user could be adjusted to reflect the full anthropometric design range (e.g., 3.5 feet for 6-year-olds, 6.5 feet for adults). The Public Affairs Office evaluated the view from the public viewing area, considering what a range of visitor sizes might be able to see from the range of viewing area floor heights. The office was also able to perform a preliminary camera viewing analysis, “flying” to various possible camera locations to inspect the composition of the possible camera fields of view. The ability to pan and tilt and change “lenses” (i.e., narrow- to wide-angle fields of view) in real time was especially useful.

These analyses helped answer several specific control room architectural questions posed by the architectural

engineers (e.g., adequacy of room size, control room and public viewing area relationships, camera secondary structure locations, etc.). The most important result, from a human factors perspective, was the general change in thinking on what a control room should look like and what should drive its configuration. The focus on the team and on features that enhance and enable more efficient team operations became more visible and important drivers for control room layout. Classic control room layouts with all consoles in parallel rows, facing forward towards the video wall, were viewed as less desirable and less conducive to efficient team operations than a configuration with grouped consoles based on inter- and intrateam operational considerations.

[1]Hale, J.P. 1993. Virtual Reality as a Human Factors Design Analysis Tool. Proceedings of the Southeastern Simulation Conference, Huntsville, Alabama, 140–144.

[2]Null, C.H., and Jenkins, J.P. (eds.) 1993. *NASA Virtual Environment Research, Applications, and Technology.* National Aeronautics and Space Administration.

[3]Dittmar, M.L., and Hale, J.P. 1994. Virtual Reality as a Human Factors Design Analysis Tool for Architectural Spaces—Control Rooms to Space Stations II: Subjective Measures. Proceedings of the Human Factors Society 36th Annual Meeting, Santa Monica, California: Human Factors Society, 280–283.

[4]Hale, J.P., and Dittmar, M.L. 1994. Virtual Reality as a Human Factors Design Analysis Tool for Architectural Spaces—Control Rooms to Space Stations I: Objective Measures. Proceedings of the Human Factors Society 36th Annual Meeting, Santa Monica, California: Human Factors Society, 275–279.