Technology Development for Satellite-Based Laser Wind Sensing

Michael J. Kavaya/EB53
205–544–8453
E-mail: michael.kavaya@msfc.nasa.gov

This paper discusses the technology needed to profile the Earth's winds from space with a pulsed laser radar (lidar or ladar) system; the status of the key system components; and the efforts being made at MSFC, NASA Langley Research Center (LaRC), and NASA Jet Propulsion Laboratory (JPL) to develop the required technology.

Global climate change scientists, atmospheric dynamics researchers, and numerous agencies such as NASA, NOAA, DOD, and DOE greatly desire continuous, global measurements versus height of the tropospheric wind. The necessary attributes of this difficult measurement are good horizontal and vertical coverage and resolution, horizontal vector accuracy of about 1 m/sec, and very low bias. Numerous studies over the past 20 years have consistently identified pulsed coherent detection laser radar (lidar) as the optimum and perhaps unique technique to fulfill the measurement requirements.

Despite 30 years of successful wind profiling with coherent lidar—from laboratories, trailers, trucks, airplanes, and ships—the coherent lidar technology was not ready for space science missions. Key attributes that take on enormously amplified importance for space flight include mass, volume, pulse energy, electrical efficiency, launch survival, eye safety, and lifetime. Almost all the coherent lidar wind measurements for 30 years have employed CO_2 lasers. The first wind profiling with the newer emerging solid-state laser technology began in the late 1980's. Although the solid-state laser technology trailed CO_2 lasers in pulse energy, maturity, and wind measurement heritage, the obvious analogy with electronic integrated circuits led many people to grant solid-state lasers a brighter future for space-based sensing in the categories of mass, robustness, and lifetime.

In FY93, NASA Headquarters began funding a NASA multi-center program to enable a solid-state coherent Doppler lidar system to perform the difficult space mission. MSFC manages and participates in this effort that includes technology development at LaRC and JPL. Naturally, early emphasis was on development of the required pulsed transmitter and continuous-wave (CW) local oscillator (LO) lasers, which attract the greatest attention in a lidar system. But analysis revealed that other key coherent lidar components also needed performance confirmation and/or development, and funding has allowed some work in these areas by MSFC in FY94 to 1996.

In 1993, MSFC also began a series of in-house studies to try and reduce the cost and spacecraft accommodation requirements of a coherent Doppler lidar wind profiling instrument. These instrument-mission point designs were called Autonomous Earth Orbiting Lidar Utility Sensor (AEOLUS), and examined the possibilities with both solid-state and CO_2 laser technology (fig. 111).

Figure 112 shows a possible block diagram of a solid state coherent Doppler lidar system for space-based tropospheric wind profiling. Key elements that NASA has either begun to develop or plans to develop include:

- The pulsed laser transmitter;
- The frequency-agile (tunable) local oscillator (LO) laser;
- The signal detector used to heterodyne two optical signals;
- An optical derotator;
- An optical fiber-based interferometer to assist heterodyning;
- A lightweight scanner;
- An optical lag angle compensator (LAC);
- Lidar auto alignment technology; and
- System integration and demonstration.

The pulsed transmitter laser is the "heart" of any lidar system. The transition of a space-based coherent lidar mission from "technology demonstration" to "science mission" can be related to the sensitivity or size of the lidar system. The five primary parameters which determine a lidar's sensitivity are laser pulse energy, optical

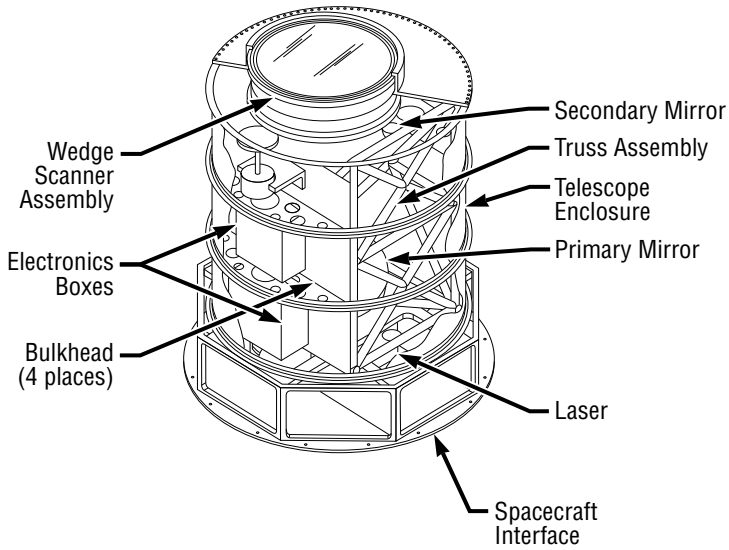

Figure 111.—AEOLUS Coherent Lidar design.

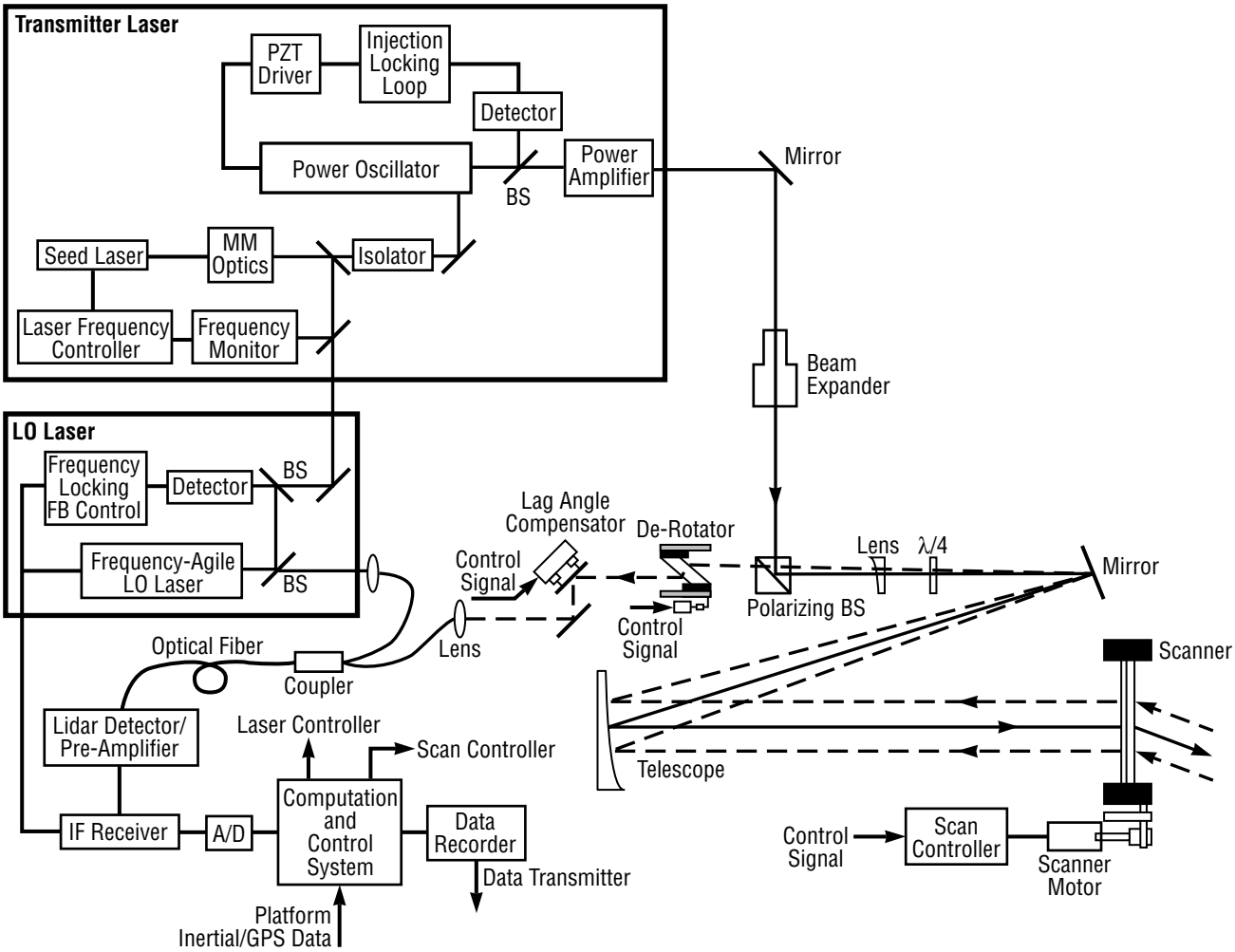

Figure 112.—Coherent Doppler Lidar System block diagram.

diameter, transmitter/receiver alignment, orbit height, and laser beam nadir angle. Although frequently debated, the "transition" pulse energy occurs somewhere around 200 mJ for reasonable values of the other parameters. Since FY93, LaRC has been developing a 500-mJ-pulsed solid-state laser for MSFC. Delivery is expected in FY97. LaRC is using the material Tm,Ho:YLF to make the 2.06-µm wavelength, diode-pumped, 10-Hz pulse repetition frequency (PRF), 5 percent electrically efficient, linearly polarized laser. The beam quality must be excellent to avoid heterodyne losses. The pulse spectrum must be narrow and well behaved to allow accurate velocity estimation. A major milestone occurred in early FY97 when LaRC demonstrated 700-mJ pulse energy at 1 Hz PRF. Recently, Coherent Technologies, Inc. (CTI) won a NASA SBIR Phase II contract to build a 500-mJ, 10-Hz, diode-pumped slave oscillator breadboard. This will be delivered to MSFC in March of 1998. MSFC had previously procured a 100-mJ, 6-Hz, flashlamp-pumped laser from CTI in 1993. This laser was loaned to the U.S. Air Force Wright Laboratory, who flew it on a C–141 as part of the Ballistic Winds program. The successful wind profiles with the MSFC laser represent the current pulse energy record for solid-state coherent lidar wind measurement.

In order to allow prospective lasers to be tested, MSFC developed a Laser Characterization Facility (LCF) during FY93. The LCF has been used to characterize several lasers for the U.S. Air Force, LaRC, and others.

A typical altitude proposed for the lidar wind instrument is 350 km. At lower altitudes, atmospheric drag increases. At higher altitudes, the range squared effect on the lidar's signal-to-noise ratio (SNR) hurts the system sensitivity. At 350 km, the spacecraft and instrument have a tangential velocity of about 7,700 m/sec. Since good horizontal coverage is desired, and since accurate horizontal winds require laser shots at the same location from two perspectives, a continuous or step/stare conical scan is usually baselined. For a typical nadir angle at the instrument of 30 degrees, the Doppler shift of the light backscattered from the aerosol particle targets will vary with the azimuth angle of the conical scan over ±3.9 GHz. If uncompensated, this Doppler shift would stress the specifications of the optical detector, preamplifiers, A/D converters, and data rate. Therefore a tunable, controllable solid-state CW local oscillator laser is required to compensate for the spacecraft forward velocity, and possibly to compensate also for the Earth's rotation (465 m/sec at the equator). Since FY93, JPL has been developing this laser for MSFC, and delivery is expected in FY97. JPL demonstrated the 8-GHz tuning specification in early FY97.

MSFC is ensuring the compatibility of the lasers being developed by LaRC and JPL, and their joint compatibility with the space wind mission. The MSFC LCF will also be used to characterize the JPL laser.

If the pulsed laser is the "heart" of the coherent lidar system, then the optical heterodyne detector represents the "eyes." It must meet several specifications simultaneously. These are efficiency, bandwidth, linearity, saturation level, active area, and uniformity. Excellent wind velocity measurement is possible with only about 50 photons striking the detector, and less than 10 "coherent" photoelectrons contributing to the signal current. A key parameter, the heterodyne quantum efficiency, is not well understood or measured by detector manufacturers. Yet it is crucial since the SNR is proportional to it. Gain or loss in this parameter means good or bad news for the required laser pulse energy and/or the optical mirror diameter. MSFC developed a Detector Characterization Facility (DCF) during FY94 and FY95 for the purpose of allowing characterization of an assortment of candidate detectors. Several detectors have been procured and are being tested. Specialty and custom detectors may be procured depending on the performance of commercial detectors, and on the envisioned receiver configuration of the space instrument.

The backscattered photons must be collected and well aligned with the LO photons in direction, curvature, and polarization. In the case of a continuously rotating scanner, the 2 to 3 m/sec round trip time of light to the atmosphere and back will produce an error in alignment when the backscattered photons enter the lidar through the scanner in its new position. The job of the optical derotator is to realign the signal photons. Studies of this element began at a low level in FY95. A novel derotator was invented by engineers at the University of Alabama in Huntsville (UAH), who have applied for a patent. Further refinement will continue in FY97 as part of an overall optical subsystem design.

Optical fibers may be used instead of free-space propagation for some or all of the photon paths within the coherent lidar system. With the assortment of optical fiber tools such as variable ratio couplers, pigtailed detectors, and robust connectors, the reliability of the lidar system alignment may be improved. Furthermore, components may be separated for electromagnetic interference (EMI), heat removal, or other reasons, rather than being forced close together on one optical bench. The MSFC DCF has been enhanced during FY96 to allow study of the performance of optical fibers for 2-µm coherent detection. Several candidate components have been procured and laboratory measurements have recently begun.

Conventional means to effect the required conical scan of the transmitted laser beam include a rotating telescope, a rotating flat mirror, and a rotating wedge. Each of these has disadvantages for space applications such as mass, volume, electrical power requirements for rotation, or center of mass displacement from axis of rotation. The recent development of diffractive and holographic optical elements (DOE, HOE) holds much promise of a significantly lighter and more benign scanner. MSFC began studying and procuring experimental HOE's and DOE's in FY95. To date, the necessary clear aperture of 50 cm and preservation of beam quality have not been demonstrated simultaneously with efficient deflection of laser light by 30 degrees. Several promising development efforts are now underway including a joint effort with UAH, a partnership with the Army/MICOM, and a NASA SBIR contract. Any sufficiently successful HOE or DOE will be tested in a 2-µm coherent lidar system for its performance impact.

Just as the optical derotator compensates for the continuous rotation of the scanner during the "echo" time of the photons, a LAC is needed to compensate for the continuous nadir rotation (orbiting) of the spacecraft, for the varying scanner and spacecraft orientation during receipt of the signal photons from the "thick" tropospheric target, and for any misalignment information available to the control computer before the return of the signal photons.

For the "short" optical wavelength of 2 µm, and for larger optical mirror diameters, this fine-tuning of the transmitter and receiver axes prevents significant loss of SNR. MSFC began to study this technology at a low level in FY95, and has contracted with UAH engineers to do investigation and design in FY97.

It is anticipated that a space lidar will maintain alignment through a combination of passive and active feedback loop techniques. However, the optimum mixture of techniques, and the optimum technology

are not known. MSFC hopes to receive funding to develop this technology in FY97.

Demonstration of successful operation of all the developed technologies as a system is extremely important for a coherent lidar instrument. MSFC is planning to test each new technology individually in a coherent lidar system; eventually leading to wind profile measurement utilizing all of the novel technology. A novel compact, thermally stable coherent lidar beam expanding telescope has been invented by UAH engineers under contract to MSFC. A 25-cm version of the telescope was ordered and was delivered to MSFC in November of 1996. This will be tested in a coherent lidar system and then used itself to test the other novel technology. Performance will be compared with the predicted performance using the MSFC coherent lidar wind measurement computer simulation developed by UAH. The lidar will be used to collect atmospheric data for NASA scientists. The 500-mJ-pulse energy will allow wind and aerosol backscatter measurements at much higher altitudes than currently possible. Packaging of the lidar for NASA aircraft science missions is also a possibility.

For more information, see our WWW site: http://eo.msfc.nasa.gov

[1]Kavaya, M.J.: "Instrument and Mission Design of a Space Doppler Wind Lidar at NASA." Technical Digest of the ESA Doppler Wind Lidar Workshop, p. 9, ESTEC, Noordwijk, The Netherlands, Sept. 20–22 1995.

[2]Kavaya, M.J.; Spiers, G.D.; Lobl, E.S.; Rothermel, J.; and Keller, V.W.: "Direct Global Measurements of Tropospheric Winds Employing a Simplified Coherent Laser Radar Using Fully Scaleable Technology and Technique." Paper 2214–31, Proc. *SPIE*, vol. 2214, pp. 237–249. Space Instrumentation and Dual-Use Technologies, Session 5 on "Faster, Cheaper, Smaller Space Science Optical Instruments," Orlando, FL, April 6, 1994.

Sponsor: NASA Headquarters, Office of Aeronautics

University Involvement: University of Alabama in Huntsville

Biographical Sketch: Dr. Michael J. Kavaya is chief of the Electro-Optics Branch in the MSFC Astrionics Laboratory. He received his BSEE from Purdue University, and his MSEE and Ph.D. EE from the California Institute of Technology. He has worked at MSFC since 1991.